Cambridge Assessment International Education

Cambridge International AS & A Level

PHYSICS **9702/13**

Paper 1 Multiple Choice **October/November 2023**

1 hour 15 minutes

You must answer on the multiple choice answer sheet.

You will need: Multiple choice answer sheet
Soft clean eraser
Soft pencil (type B or HB is recommended)

INSTRUCTIONS

- There are **forty** questions on this paper. Answer **all** questions.
- For each question there are four possible answers **A**, **B**, **C** and **D**. Choose the **one** you consider correct and record your choice in soft pencil on the multiple choice answer sheet.
- Follow the instructions on the multiple choice answer sheet.
- Write in soft pencil.
- Write your name, centre number and candidate number on the multiple choice answer sheet in the spaces provided unless this has been done for you.
- Do **not** use correction fluid.
- Do **not** write on any bar codes.
- You may use a calculator.

INFORMATION

- The total mark for this paper is 40.
- Each correct answer will score one mark.
- Any rough working should be done on this question paper.

IB23 11_9702_13/RP
© UCLES 2023

Data

acceleration of free fall	$g = 9.81\,\text{m s}^{-2}$
speed of light in free space	$c = 3.00 \times 10^{8}\,\text{m s}^{-1}$
elementary charge	$e = 1.60 \times 10^{-19}\,\text{C}$
unified atomic mass unit	$1\,\text{u} = 1.66 \times 10^{-27}\,\text{kg}$
rest mass of proton	$m_\text{p} = 1.67 \times 10^{-27}\,\text{kg}$
rest mass of electron	$m_\text{e} = 9.11 \times 10^{-31}\,\text{kg}$
Avogadro constant	$N_\text{A} = 6.02 \times 10^{23}\,\text{mol}^{-1}$
molar gas constant	$R = 8.31\,\text{J K}^{-1}\,\text{mol}^{-1}$
Boltzmann constant	$k = 1.38 \times 10^{-23}\,\text{J K}^{-1}$
gravitational constant	$G = 6.67 \times 10^{-11}\,\text{N m}^2\,\text{kg}^{-2}$
permittivity of free space	$\varepsilon_0 = 8.85 \times 10^{-12}\,\text{F m}^{-1}$ $\left(\frac{1}{4\pi\varepsilon_0} = 8.99 \times 10^{9}\,\text{m F}^{-1}\right)$
Planck constant	$h = 6.63 \times 10^{-34}\,\text{J s}$
Stefan–Boltzmann constant	$\sigma = 5.67 \times 10^{-8}\,\text{W m}^{-2}\,\text{K}^{-4}$

Formulae

uniformly accelerated motion	$s = ut + \frac{1}{2}at^2$ $v^2 = u^2 + 2as$
hydrostatic pressure	$\Delta p = \rho g \Delta h$
upthrust	$F = \rho g V$
Doppler effect for sound waves	$f_\text{o} = \frac{f_\text{s} v}{v \pm v_\text{s}}$
electric current	$I = Anvq$
resistors in series	$R = R_1 + R_2 + \ldots$
resistors in parallel	$\frac{1}{R} = \frac{1}{R_1} + \frac{1}{R_2} + \ldots$

© UCLES 2023

1 What is the best estimate of the wavelength of green light?

A 260 nm **B** 540 nm **C** 780 nm **D** 920 nm

2 In an electric circuit, an ammeter reads 2 μA.

In a second circuit, the ammeter reads 1 mA.

How many times larger is the current in the second circuit compared with the current in the first circuit?

A 500 **B** 5000 **C** 500 000 **D** 5 000 000

3 A set of repeated measurements is made of a fixed quantity. An average of these measurements is calculated.

What is the effect of averaging on the random error and the systematic error in the measurements?

A Random error and systematic error are both reduced.

B Random error and systematic error are both unaffected.

C Random error is reduced but systematic error is unaffected.

D Random error is unaffected but systematic error is reduced.

4 A boat is crossing a river in which the water is moving at a speed of $4.0\,m\,s^{-1}$ from left to right.

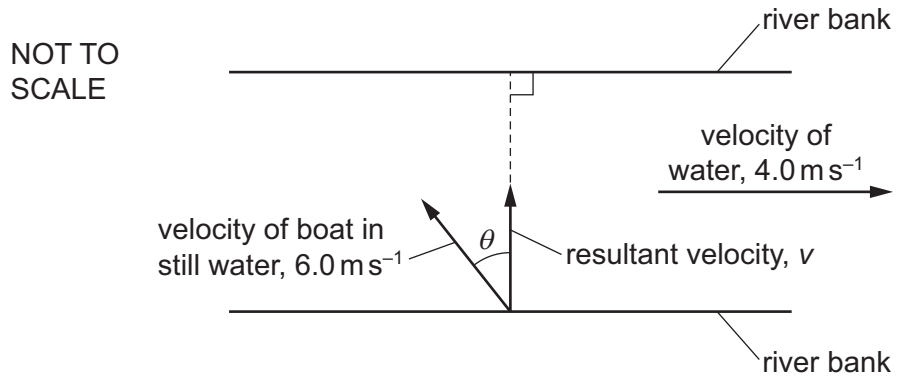

In still water, the speed of the boat is $6.0\,m\,s^{-1}$. The boat is directed at an angle θ to a line perpendicular to the river banks. The resultant velocity v of the boat is in a direction perpendicular to the river banks.

What are the values of θ and v?

	θ / °	v / m s^{-1}
A	42	4.5
B	42	7.2
C	48	4.5
D	48	7.2

5 A student walks at a constant speed for a distance of 50 m in a time of 40 s. The student rests for a time of 10 s and then walks back to the starting point at a constant speed in a time of 30 s.

What is the distance–time graph for the motion of the student?

A

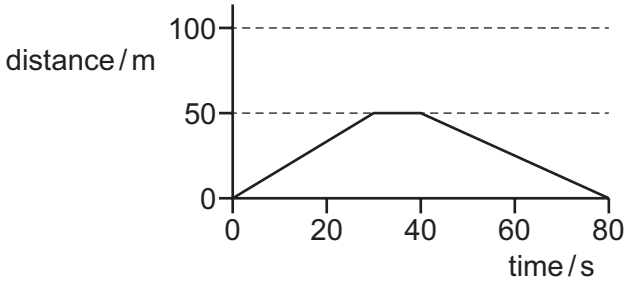

B

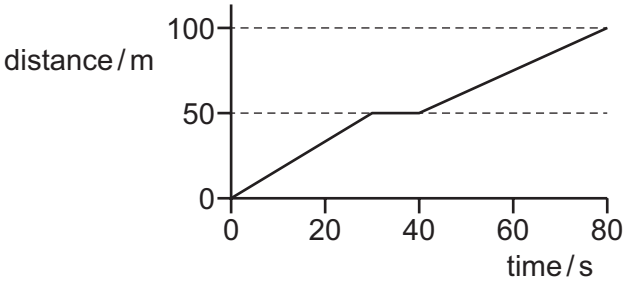

C

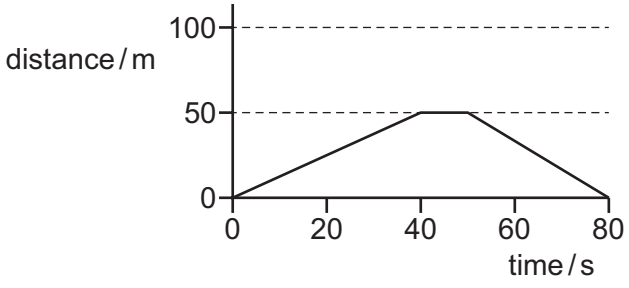

D

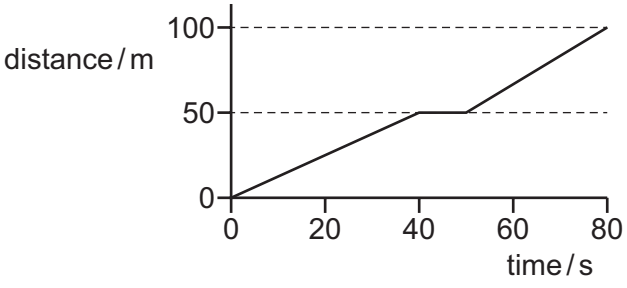

© UCLES 2023

6 The time taken for an object to fall from rest through a certain distance on Mars is T_M. The time taken for the same object to fall from rest through the same distance on Earth is T_E. The acceleration of free fall on Mars is $3.71\,m\,s^{-2}$.

Assume that air resistance is negligible on both Earth and Mars.

What is the ratio $\frac{T_M}{T_E}$?

A 0.378 **B** 0.615 **C** 1.63 **D** 2.64

7 Which statement about mass is correct?

A Mass has a magnitude and a direction.

B Mass resists changes in motion.

C The greater the mass of an object, the greater its acceleration when falling in a vacuum.

D The mass of an object depends on its location.

8 A snooker ball has a mass of 200 g. It hits the cushion of a snooker table and rebounds along its original path.

The ball arrives at the cushion with a speed of $14.0\,m\,s^{-1}$ and then leaves it with a speed of $7.0\,m\,s^{-1}$. The ball and the cushion are in contact for a time of 0.60 s.

What is the average force exerted on the ball by the cushion?

A 1.4 N **B** 2.3 N **C** 4.2 N **D** 7.0 N

9 A ball falls from rest through air and eventually reaches a constant velocity.

For this fall, forces *X* and *Y* vary with time as shown.

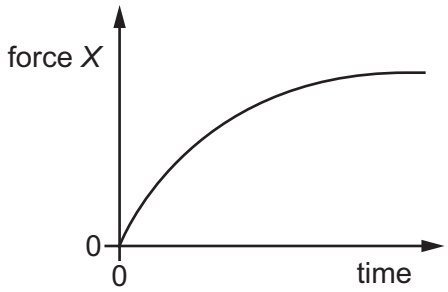

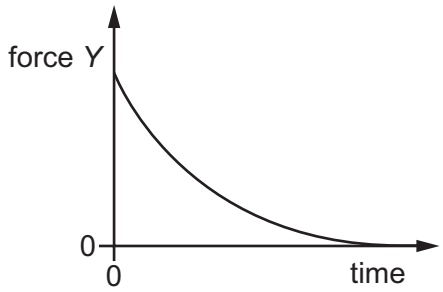

What could be forces *X* and *Y*?

	force *X*	force *Y*
A	air resistance	resultant force
B	air resistance	weight
C	upthrust	resultant force
D	upthrust	weight

10 An object X of mass 0.30 kg is travelling in a straight line at a constant velocity of $3.0\,m\,s^{-1}$ on a horizontal frictionless surface. Object X collides with a stationary object Y of mass 0.50 kg.

After the collision, X moves with a velocity of $2.0\,m\,s^{-1}$ at an angle of 60° to its direction before the collision. Object Y moves with a velocity v at an angle of 41° to the direction of X before the collision, as shown.

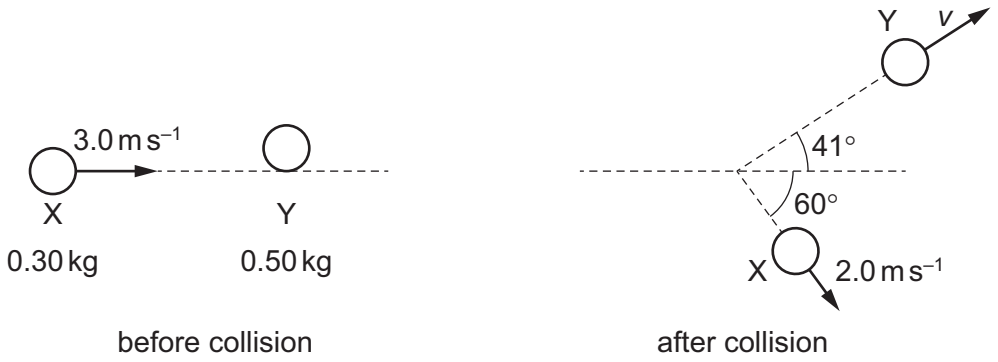

What is the value of v?

A $0.80\,m\,s^{-1}$ **B** $1.2\,m\,s^{-1}$ **C** $1.6\,m\,s^{-1}$ **D** $1.8\,m\,s^{-1}$

11 A uniform rigid beam of length 3.2 m is pivoted at its centre. Two children sit at the opposite ends of the beam, as shown.

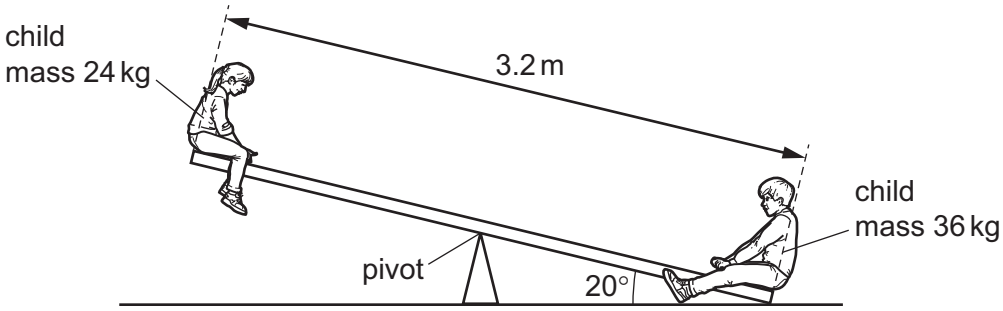

One child has a mass of 24 kg. The other child has a mass of 36 kg. The heavier child causes one end of the beam to permanently rest on the ground, so that the beam makes an angle of 20° to the horizontal ground.

What is the moment of the weight of the 24 kg child about the pivot?

A 72 N m **B** 130 N m **C** 350 N m **D** 380 N m

© UCLES 2023

12 Two parts of a sailing boat are the mast and the boom. The mast is a vertical rigid beam and the boom is a horizontal rigid beam. One end of the boom is attached to the mast by a pivot. The other end of the boom is connected to the mast by a rope, as shown.

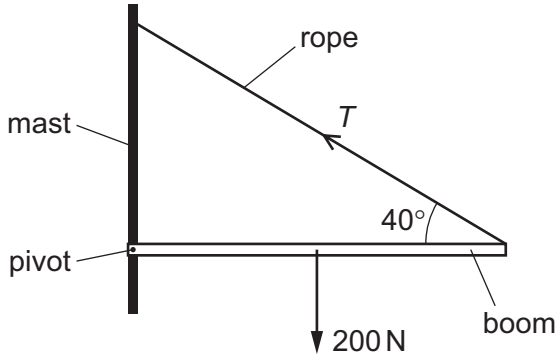

The rope is at an angle of 40° to the horizontal and exerts a tension force T on the boom. The weight of the boom is 200 N. The mass of the boom is uniformly distributed along its length. The boom is in equilibrium.

What is the magnitude of T?

A 130 N **B** 160 N **C** 260 N **D** 310 N

13 Full-fat milk is made up of fat-free milk mixed with fat.

A volume of $1.000 \times 10^{-3}\,m^3$ of full-fat milk has a mass of 1.035 kg. It contains 4.00% fat by volume.

The density of fat-free milk is $1.040 \times 10^{3}\,kg\,m^{-3}$.

What is the density of fat?

A $1.25 \times 10^{2}\,kg\,m^{-3}$

B $9.15 \times 10^{2}\,kg\,m^{-3}$

C $9.28 \times 10^{2}\,kg\,m^{-3}$

D $1.16 \times 10^{3}\,kg\,m^{-3}$

14 Which expression for pressure is correct?

A force per unit area

B mass per unit area

C mass per unit volume

D weight per unit volume

© UCLES 2023

15 A wooden cylinder floats partially submerged in a bath of water. A force F is applied to the cylinder until it is just fully submerged.

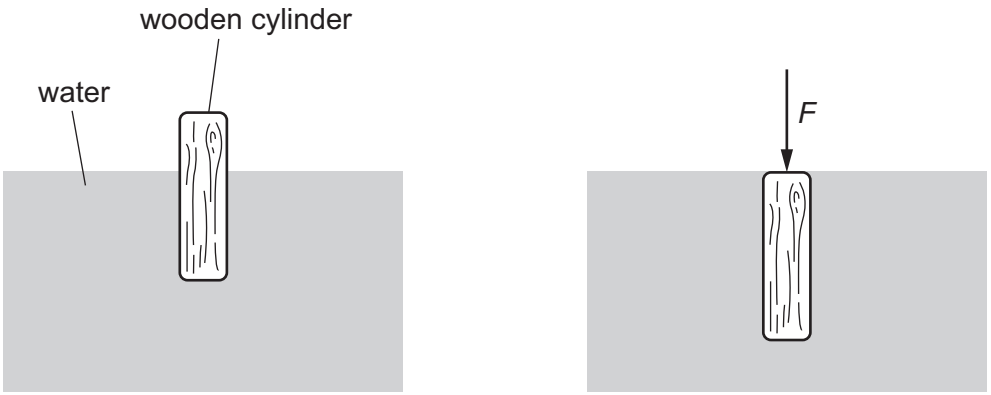

Which statement is **not** correct?

A Some of the water gains gravitational potential energy.

B The cylinder loses gravitational potential energy.

C Work is done by force F on the cylinder.

D Work is done by the upthrust on the cylinder.

16 A system has a useful power output of 4.0 W and a wasted power of 16 W.

What is the efficiency of the system?

A 5.0% **B** 20% **C** 25% **D** 80%

17 A parachutist is falling towards the ground at a constant speed v. The rate at which she is losing gravitational potential energy is R.

The acceleration of free fall is g.

What is the mass of the parachutist?

A $\frac{gv}{R}$ **B** $\frac{R}{gv}$ **C** $\frac{2R}{v^2}$ **D** $\frac{v^2}{2R}$

18 A copper wire of diameter 1.6 mm is stretched within its limit of proportionality by a tensile force of 430 N.

The Young modulus of copper is 130 GPa.

What is the strain in the wire?

A 4.1×10^{-4} **B** 1.3×10^{-3} **C** 1.6×10^{-3} **D** 5.2×10^{-3}

© UCLES 2023

19 Compressive forces are applied normally to the end faces of a cylinder of initial length L. The cylinder is compressed by the forces so that its length decreases to $0.6L$. After the compressive forces are removed, the cylinder's length increases to $0.8L$.

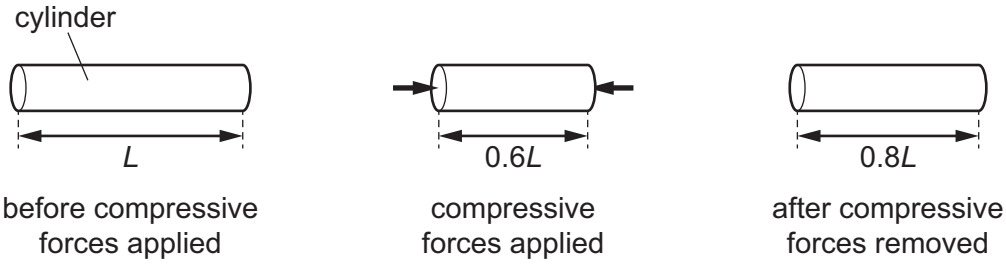

What describes the deformation of the cylinder when its length was $0.6L$?

A both elastic and plastic

B elastic only

C plastic only

D neither elastic nor plastic

20 When sound travels through air, the air particles vibrate. A graph of displacement against time for a single air particle is shown.

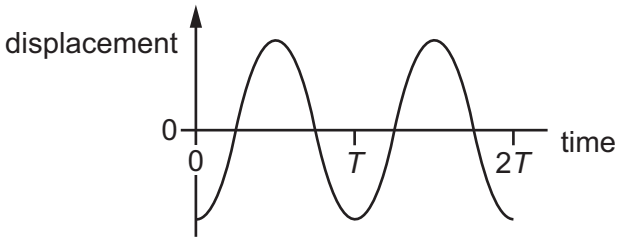

Which graph shows how the kinetic energy of the air particle varies with time?

A

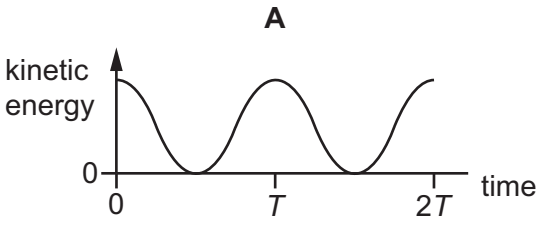

B

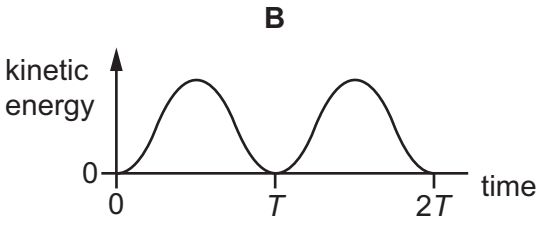

C

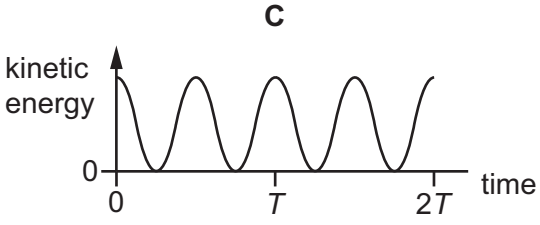

D

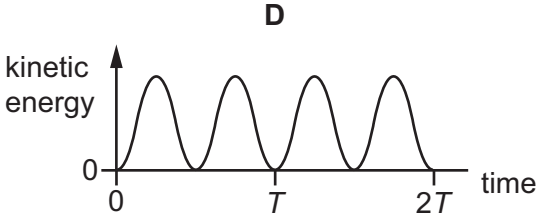

21 A wave travels on the surface of water. P, Q, R and S are four particles of water on the surface.

The diagram shows the positions of the particles at one instant. The direction of travel of the wave is from left to right.

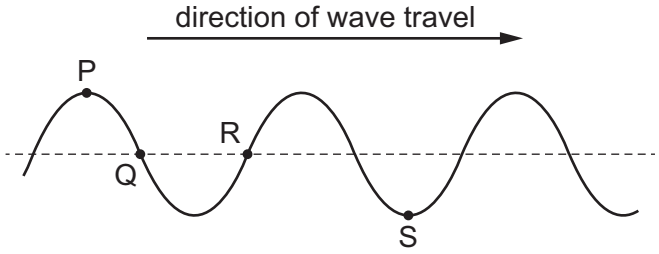

Which two particles are about to move upwards?

A P and R **B** P and S **C** R and S **D** Q and S

22 A loudspeaker emits sound of frequency f_s. The loudspeaker is attached to a car that moves with increasing speed directly towards a stationary observer.

Which statement describes the frequency of the sound heard by the observer?

A a frequency greater than f_s and increasing

B a frequency greater than f_s but decreasing

C a frequency less than f_s and decreasing

D a frequency less than f_s but increasing

23 Which statement about electromagnetic waves in a vacuum is correct?

A Amplitude is inversely proportional to velocity.

B Frequency is inversely proportional to wavelength.

C Intensity is proportional to amplitude.

D Velocity is proportional to wavelength.

© UCLES 2023

24 A vertically polarised electromagnetic wave of intensity I_0 is incident normally on a polarising filter. The transmission axis of the filter is at an angle of 30° to the vertical.

The transmitted wave from the first filter is then incident normally on a second polarising filter. The transmission axis of this filter is at an angle of 90° to the vertical.

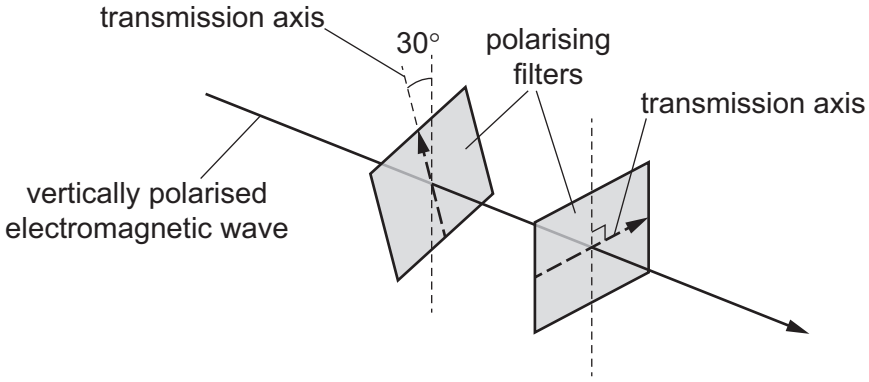

What is the intensity of the wave after passing through the second filter?

A 0 **B** $0.063\,I_0$ **C** $0.19\,I_0$ **D** $0.56\,I_0$

25 Which statement concerning a stationary wave is correct?

A All the particles between two adjacent nodes oscillate in phase.

B The amplitude of the stationary wave is equal to the amplitude of one of the waves creating it.

C The wavelength of the stationary wave is equal to the separation of two adjacent nodes.

D There is no displacement of a particle at an antinode at any time.

26 Stationary sound waves can be formed in the air columns of pipes. One type of pipe is closed at one end and open at the other end. Another type of pipe is open at both ends.

Which pipe can form a stationary sound wave with the lowest frequency?

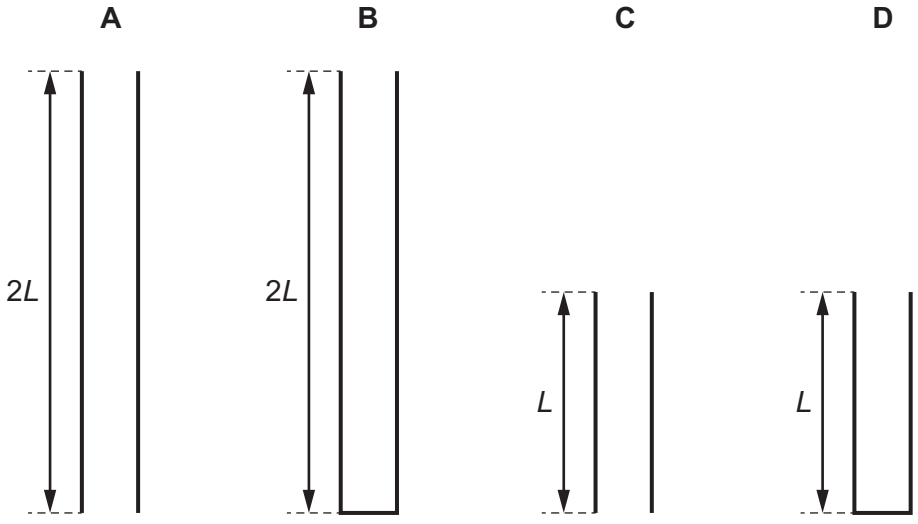

27 Water waves in a ripple tank are made to pass through a small gap, as shown.

Which diagram shows the waves after they have passed through the gap?

A

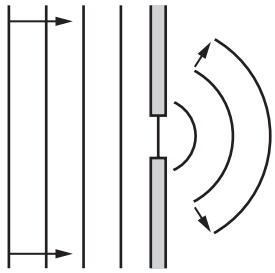

B

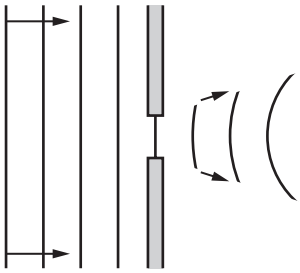

C

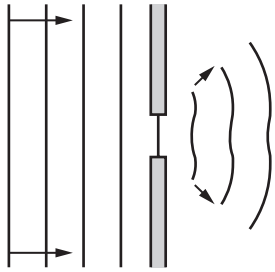

D

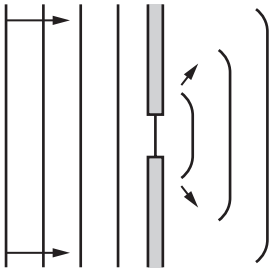

28 Light of a single wavelength is incident normally on a double slit. The slit separation can be varied.

A screen is placed a fixed distance away from the double slit. The screen and double slit are parallel. A pattern of bright interference fringes is observed on a screen.



Which graph best shows the variation of the separation x of the bright interference fringes with the slit separation a?

A

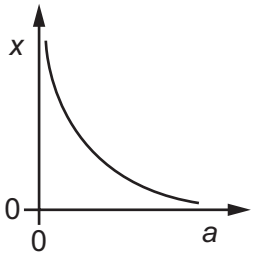

B

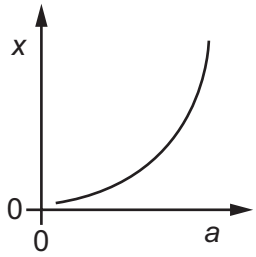

C

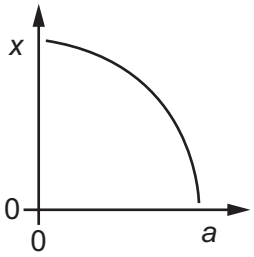

D

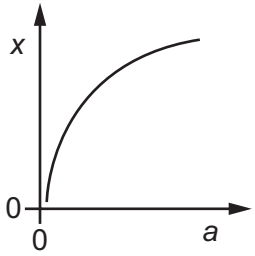

29 A diffraction grating is used to measure the wavelength of light.

The spacing of the slits in the grating is 1.15×10^{-6} m. The angle between the first-order diffraction maxima is 60.0°, as shown.

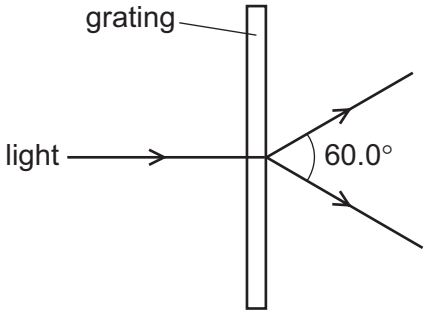

What is the wavelength of the light?

A 288 nm **B** 498 nm **C** 575 nm **D** 996 nm

30 What could **not** be used to create an electric current?

A alpha-particles

B beta-particles

C neutrons

D protons

31 What is the definition of the potential difference (p.d.) across a component?

A the energy transferred per unit charge

B the energy transferred per unit current

C the power transferred per unit charge

D the power transferred per unit current

32 The resistance of a filament lamp increases as the current in it increases.

What is the reason for this?

A The charge of each charge carrier increases.

B The potential difference across the filament decreases.

C The power dissipated by the filament decreases.

D The temperature of the filament increases.

© UCLES 2023

33 A battery of electromotive force (e.m.f.) 12 V and negligible internal resistance is connected to a fixed resistor of resistance 40 Ω and a thermistor of resistance R_T, as shown.

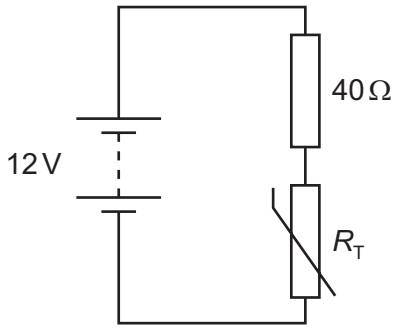

Initially, the temperature of the thermistor is 15 °C and the current in the circuit is 0.10 A.

The temperature of the thermistor then changes, which causes the current to increase to 0.12 A.

How does the temperature of the thermistor change and what is R_T at the new temperature?

	temperature of thermistor	R_T at new temperature / Ω
A	increases	60
B	decreases	60
C	increases	100
D	decreases	100

© UCLES 2023

34 A cell of electromotive force (e.m.f.) 3.0 V and internal resistance 0.50 Ω is connected to a variable resistor, a voltmeter and an ammeter, as shown. The resistance of the variable resistor is varied.

The reading on the ammeter I and the reading on the voltmeter V are recorded.

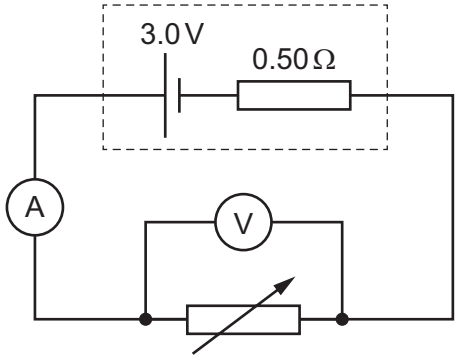

Which graph shows how V varies with I?

A

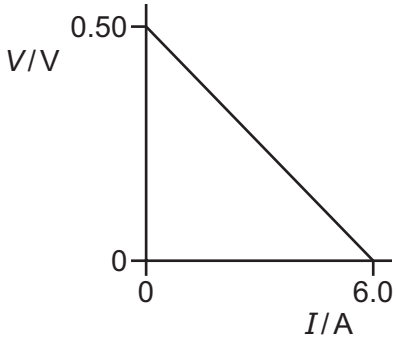

B

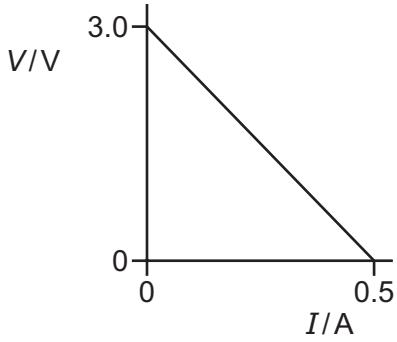

C

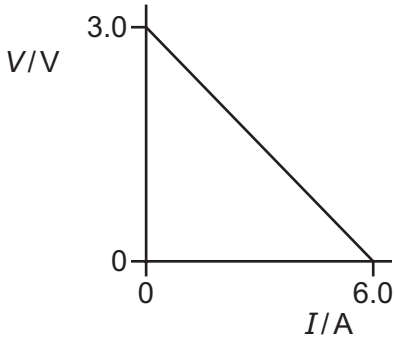

D

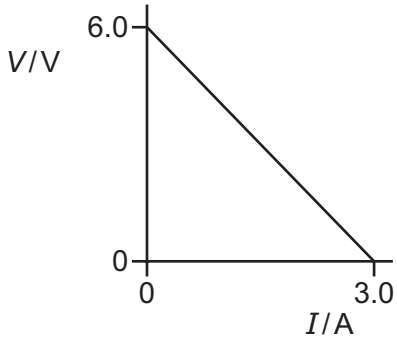

35 Three resistors, R_1, R_2 and R_3, are connected in parallel to a cell. The currents in the resistors are I_1, I_2 and I_3. The potential differences across the resistors are V_1, V_2 and V_3. The current in the cell is I_0. The potential difference across the cell is V_0, as shown.

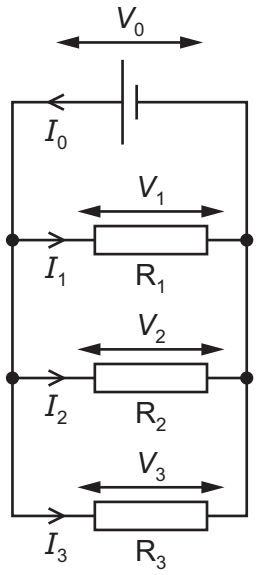

Which equation can be obtained by applying Kirchhoff's second law to the circuit?

A $I_0 = I_1 = I_2 = I_3$

B $I_0 = I_1 + I_2 + I_3$

C $V_0 = V_1 = V_2 = V_3$

D $V_0 = V_1 + V_2 + V_3$

36 Three resistors, each of resistance R, are connected in a network, as shown.

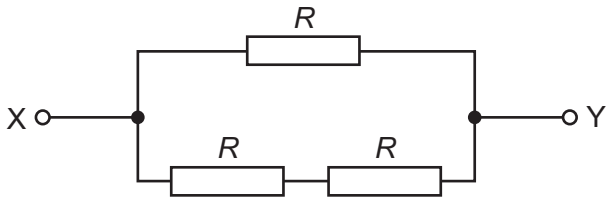

The total resistance between points X and Y is 8.0 Ω.

What is the value of R?

A 2.7 Ω **B** 4.0 Ω **C** 5.3 Ω **D** 12 Ω

© UCLES 2023

37 A potentiometer and a driver cell of electromotive force (e.m.f.) *E* are used to measure the e.m.f. of a new cell.

A sliding contact at P is moved along a resistance wire QR until the reading on the galvanometer is zero.

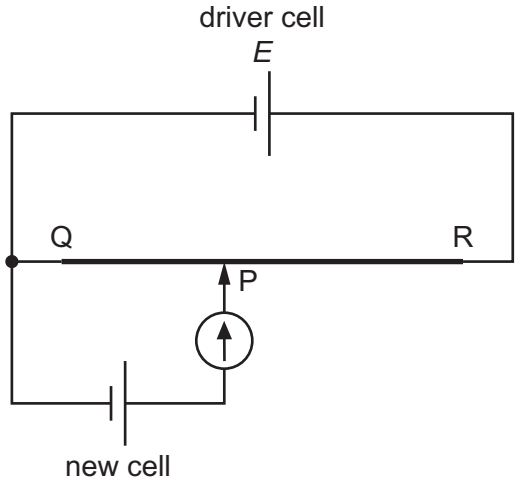

What is an essential requirement for the e.m.f. of the new cell to be measured accurately?

A The e.m.f. of the driver cell must be less than the e.m.f. of the new cell.

B The galvanometer must have a large resistance.

C The internal resistance of the new cell must be zero.

D The resistance per unit length of the wire QR must be constant.

38 The table shows the number of nucleons and the total number of particles (protons, neutrons and electrons) in neutral atoms of four nuclides W, X, Y and Z.

	number of nucleons	total number of particles
W	19	30
X	19	31
Y	21	32
Z	22	31

Which two nuclides are isotopes of each other?

A W and X **B** W and Y **C** X and Z **D** Y and Z

39 When a sample of a radioactive isotope decays by α-particle emission, the α-particles emitted have a single discrete energy.

When a sample of a radioactive isotope decays by β^- particle emission, the β^- particles emitted have a continuous range of energies.

What is the explanation for this?

A An antineutrino is emitted with a β^- particle but not with an α-particle.

B An antineutrino is emitted with an α-particle but not with a β^- particle.

C The α-particles have much more energy than the β^- particles.

D The β^- particles have much more energy than the α-particles.

40 Some particles are a combination of three quarks.

Which combination of quarks does **not** result in a particle with a charge of either $+1.6 \times 10^{-19}$ C or zero?

A up, down, down

B up, strange, strange

C up, up, down

D up, up, up

© UCLES 2023

BLANK PAGE

BLANK PAGE

Permission to reproduce items where third-party owned material protected by copyright is included has been sought and cleared where possible. Every reasonable effort has been made by the publisher (UCLES) to trace copyright holders, but if any items requiring clearance have unwittingly been included, the publisher will be pleased to make amends at the earliest possible opportunity.

To avoid the issue of disclosure of answer-related information to candidates, all copyright acknowledgements are reproduced online in the Cambridge Assessment International Education Copyright Acknowledgements Booklet. This is produced for each series of examinations and is freely available to download at www.cambridgeinternational.org after the live examination series.

Cambridge Assessment International Education is part of Cambridge Assessment. Cambridge Assessment is the brand name of the University of Cambridge Local Examinations Syndicate (UCLES), which is a department of the University of Cambridge.

© UCLES 2023